KLING & FREITAG
SOUND SYSTEMS

EN | VERSION 1.0 | 06/16/21

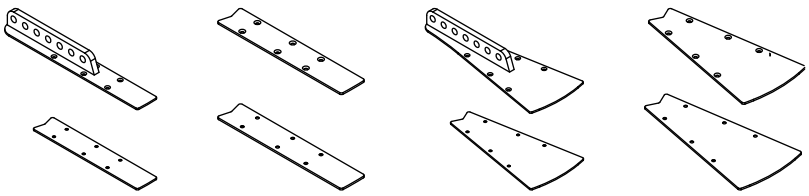

USER'S MANUAL

K&F SPECTRA 212i Configuration Accessories

Table of Content

Chapter / Content	Page
1 Introduction	**5**
1.1 Icons Used	5
1.2 About this user's manual	5
1.3 Scope of Application	5
2 Terms Used in This Manual	**6**
3 Product Description	**7**
3.1 Cluster plates (point-source mode)	7
3.1.1 Cluster Plate Set	7
3.1.2 Horizontal Cluster Flying Set	7
3.2 Connector (Line-Source Mode)	8
3.2.1 Connector Set	8
3.2.2 Connector Flying Set	9
4 Intended Use	**10**
5 Items Included	**10**
5.1 Point-Source Applications	10
5.1.1 K&F SPECTRA 212i cluster plate set	10
5.1.2 K&F SPECTRA 212i horizontal cluster flying set	10
5.2 Line-Source Applications	10
5.2.1 K&F SPECTRA 212i connector set	10
5.2.2 K&F SPECTRA 212i connector flying set	10
6 Components	**11**
6.0.1 K&F SPECTRA 212i cluster plate set	11
6.0.2 K&F SPECTRA 212i horizontal cluster flying set	11
6.0.3 K&F SPECTRA 212i connector set	11
6.0.4 K&F SPECTRA 212i connector flying set	12
7 Technical Specifications	**13**
7.1 Horizontal cluster flying set/cluster plate set (Point Source)	13
7.1.1 Overview	13
7.1.2 Dimensions	14
7.2 Connector Set/Connector Flying Set (Line Source)	15
7.2.1 Overview	15
7.2.2 Dimensions	16
8 Safety Instructions	**17**
9 Mounting for Standing Operation	**19**
9.1 Cluster Plate Set	19
9.2 Connector Set	20
10 Mounting for Vertical Suspended Operation	**21**
10.1 Determining the Flybar Down-Tilt and Orientation	21
10.1.1 Horizontal Cluster Flying Set (Point Source)	21

10.1.2 Connector Flying Set (Line Source) 22
10.1.3 Flybar grid mode (full-grid or half-grid) 23
10.2 Mounting the Flybar 24
10.3 Mounting the Horizontal Cluster Flying Set to the Speaker 25
10.4 Mounting the Connector Flying Set to the Speaker 27
11 Mounting for Horizontal Suspended Operation 29
11.1 Mounting the Cluster Plate Set and the Flying Frame to the Speaker 29
11.2 Mounting the Connector Set and the Flying Frame to the Speaker 31
12 Maintenance 33
12.1 Transportation and Storage 33
12.2 Disposal 33
13 Declaration of Conformity 34

 ©KLING & FREITAG GMBH

1 Introduction

1.1 Icons Used

WARNING This icon indicates a risk of injury or death. Not following these instructions may result in serious health problems including potentially fatal injuries.

CAUTION This icon indicates a possibly dangerous situation. Not following these instructions may cause minor injuries or damage.

NOTICE This icon marks instructions for proper use of the described products. Not following these instructions may cause malfunctions or damage.

TIP This icon marks information provided for simplified use of the described products.

1.2 About this user's manual

© KLING & FREITAG GMBH, all rights reserved.

All specifications regarding the features of the described products and applicable safety guidelines provided in this manual are based on information available at the time of publishing.

We assume no responsibility for technical specifications, dimensions, weights, and properties.

All information in this manual is subject to change without notice.

To ensure safe operation, all persons using the product must have access to this manual and all other relevant material during installation. The speaker system may neither be set up nor used until these user's manual has been read, understood and kept readily available in site.

All KLING & FREITAG manuals are originally authored in German.

KLING & FREITAG spare manuals are separately available for order or can be downloaded

Contact Us: info@kling-freitag.de
KLING & FREITAG GMBH, Wohlenbergstr. 5, D-30179 Hannover
Phone +49 (0) 511 96 99 70, fax +49 (0) 511 67 37 94

1.3 Scope of Application

If you have purchased this product together with other accessories, the instructions of those accessories including, but not limited to, mounting-accessory instructions become part of these instructions by reference.

If the wall arm is used in combination with accessories that restrict the use specified in here, those restrictions will apply.

2 Terms Used in This Manual

Cluster = a setup of point sources (point-source mode)	**Array =** a setup of line sources (line-source mode)	
Horizontal cluster = horizontal array extent	**Vertical array =** vertical array extent	**Horizontal array =** horizontal array extent
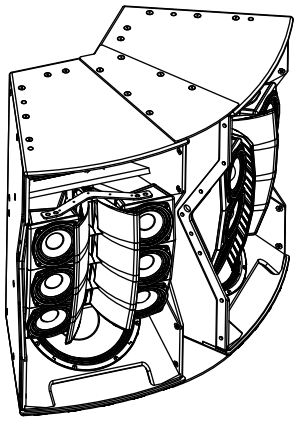	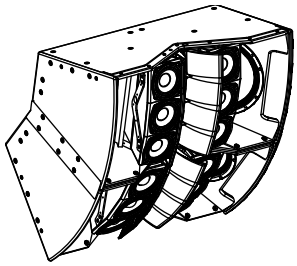	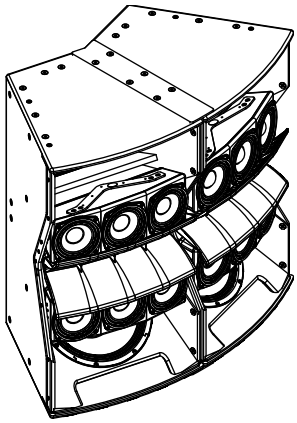

 © KLING & FREITAG GMBH

3 Product Description

3.1 Cluster plates (point-source mode)

Cluster plates are used for clustering two SPECTRA 212i systems in point-source mode. This allows for achieving a larger overall directivity. The accessories allow interconnecting the speakers in acoustically logical angles.

We recommend using the cluster plates for the SPECTRA 212i N speaker version only.

Two SPECTRA 212i N speakers configured with cluster plates provide an overall directivity of 100° × 30°.

Two product variants are available for point-source applications:

3.1.1 Cluster Plate Set

Allows for setting up a cluster of SPECTRA 212i speakers in point-source mode at a predefined angle.

You can place clusters interconnected using cluster plates on the floor or a base. For this approach, you just need to interconnect the speaker tops using a plate. A cluster plate set allows for building two clusters with two speakers each.

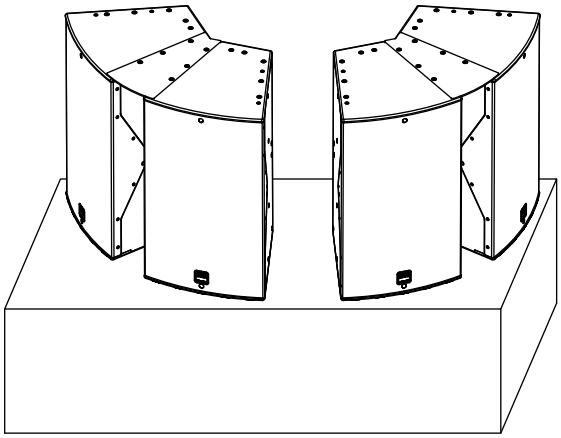

3.1.2 Horizontal Cluster Flying Set

Allows for suspending a cluster with two vertically arranged speakers in point-source mode.

This setup allows for achieving various tilt angles.

Using the horizontal cluster flying set, you can suspend two interconnected speakers using the flybar (included with the set).

Using the appropriate flybar hole, you can adjust the desired speaker down-tilt as required.

Repositioning the flybar shifts the grid by half the dimension, thus effectively doubling the achievable down-tilt options.

Suspend the speakers using either K&F 450 rotation clamps or suitable shackles (3.25 t).

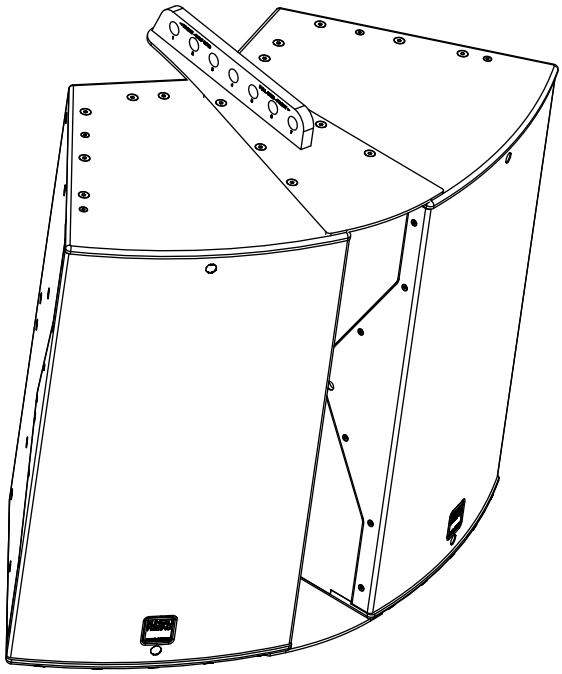

3.2 Connector (Line-Source Mode)

Connectors allow for connecting two speakers to build an array for operation in line-source mode. Interconnecting the speakers using the connectors allows for achieving the acoustically logical angle between the speakers for line-source operation.

You can use the connectors for interconnecting the following speaker combinations:

- 2 x SPECTRA 212i N (directivity: 60° × 30°)
- 2 x SPECTRA 212i XW (directivity: 120° × 30°)
- 1 x SPECTRA 212i N and 1 × SPECTRA 212i XW

Two product variants are available for line-source applications:

3.2.1 Connector Set

Allows for setting up an array of SPECTRA 212i speakers in line-source mode.

Floor operation:

You can place arrays interconnected using connectors on the floor or a base. For this approach, you just need to interconnect the speaker tops using a plate. A connector set allows for building two arrays with two speakers each.

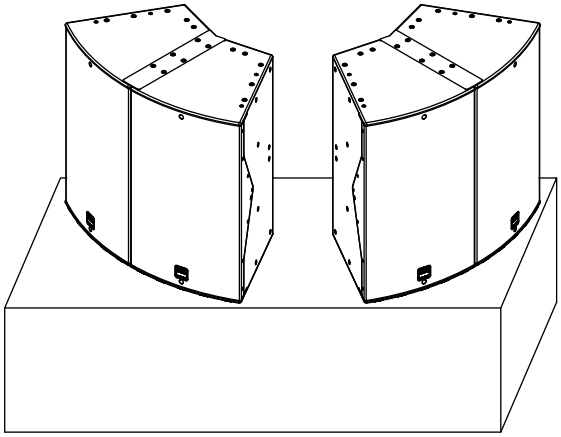

Suspended operation:

A connector set allows for building a vertical array of two speakers. To suspend this setup, you will also need a K&F SPECTRA 212i flying frame.

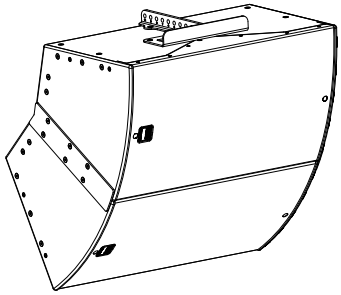

 © KLING & FREITAG GMBH

3.2.2 Connector Flying Set

Allows for suspending a horizontal array of two SPECTRA 212i speakers in line-source mode.

This setup allows for achieving various tilt angles.

Using the connector flying set, you can suspend two interconnected speakers using the flybar (included with the set). The speakers are interconnected through the connectors.

Using the appropriate flybar hole, you can adjust the desired speaker down-tilt as required. Repositioning the flybar shifts the grid by half the dimension, thus effectively doubling the achievable down-tilt options. Suspend the speakers using either K&F 450 rotation clamps or suitable shackles (3.25 t).

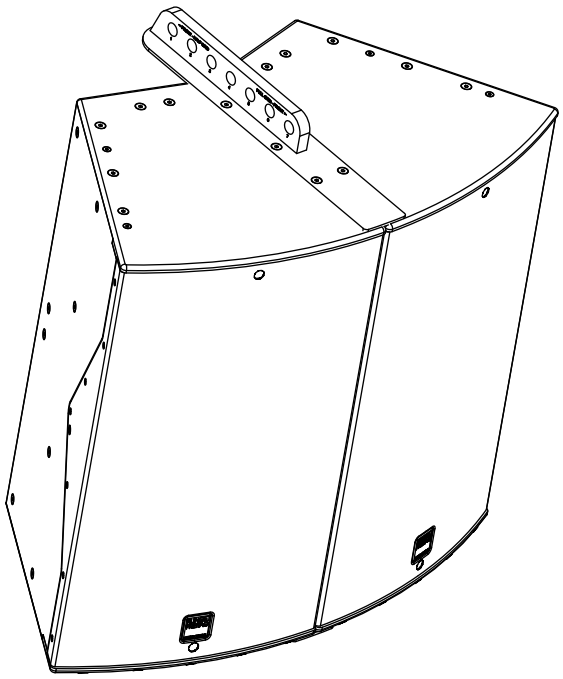

4 Intended Use

This accessory is designed exclusively for interconnecting K&F SPECTRA 212i speakers. No other use is permitted.

The horizontal cluster flying set and the connector flying set are designed exclusively for suspended installation of vertically arranged K&F SPECTRA 212i speakers using the accessories described here. Be sure to use a set of two cluster plates or connectors for suspended installation.

Also, be sure to use accessories to the SPECTRA 212i speaker system for stationary indoor installations only. The system is not designed for repeated assembly, reconfiguration, disassembly, or transport.

Any use not described in this User's Guide is not an intended use.

Unauthorized changes to the product are not permitted.

5 Items Included

The screws required for mounting the accessories to the speaker are supplied with the speaker.

5.1 Point-Source Applications

5.1.1 K&F SPECTRA 212i cluster plate set

Items Included

2 x SPECTRA 212i cluster plate stack

5.1.2 K&F SPECTRA 212i horizontal cluster flying set

Items Included

1 x SPECTRA 212i cluster plate fly

1 x flybar incl. fixtures

1 x SPECTRA 212i cluster plate stack

1 x Loctite 2400 minipack

5.2 Line-Source Applications

5.2.1 K&F SPECTRA 212i connector set

Items Included

2 x SPECTRA 212i connector

5.2.2 K&F SPECTRA 212i connector flying set

Items Included

1 x SPECTRA 212i connector

1 x SPECTRA 212i connector flying

1 x flybar incl. fixing material

1 x Loctite 2400 minipack

 © KLING & FREITAG GMBH

6 Components

6.0.1 K&F SPECTRA 212i cluster plate set

[A] 2 cluster plates stack

[B] 6 mounting holes each for speaker attachment

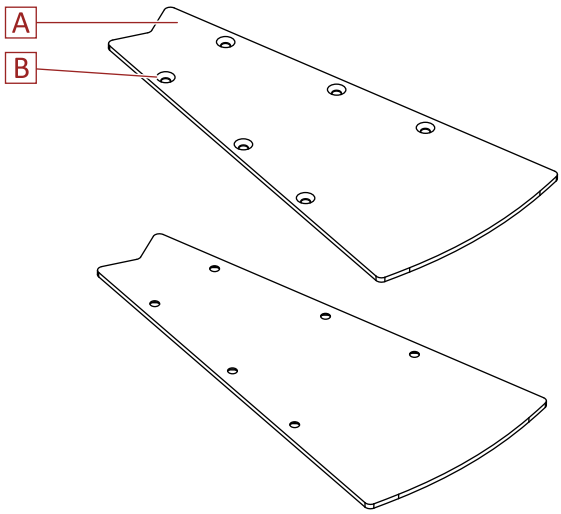

6.0.2 K&F SPECTRA 212i horizontal cluster flying set

[A] Flybar (mountable in 2 positions)

[B] 2 positioning aids

[C] 1 SPECTRA 212i cluster plate fly

[D] 4 M8 × 20 fixing screws: countersunk screws, strength class 8.8

[E] 1 SPECTRA 212i cluster plate stack

[F] For each cluster plate: 6 mounting holes for speaker attachment

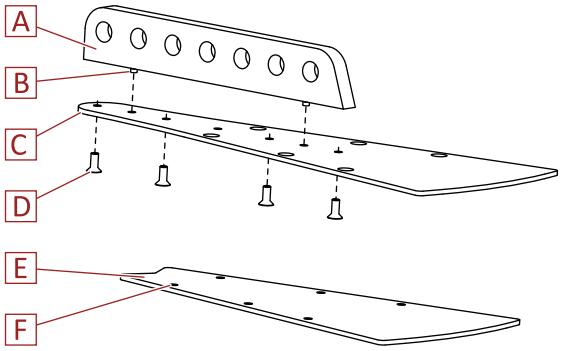

6.0.3 K&F SPECTRA 212i connector set

[A] 2 SPECTRA 212i connectors

[B] 6 mounting holes each for speaker attachment

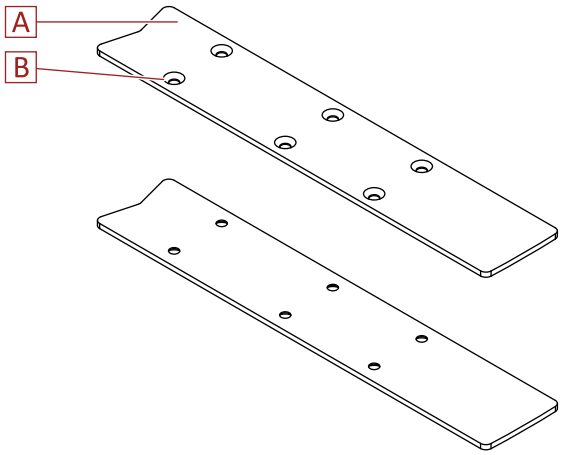

6.0.4 K&F SPECTRA 212i connector flying set

[A] Flybar (mountable in 2 positions)

[B] 2 positioning aids

[C] 1 SPECTRA 212i connector fly

[D] 4 M8 × 20 fixing screws: countersunk screws, strength class 8.8

[E] 1 SPECTRA 212i connector

[F] For each connector:
6 mounting holes for speaker attachment

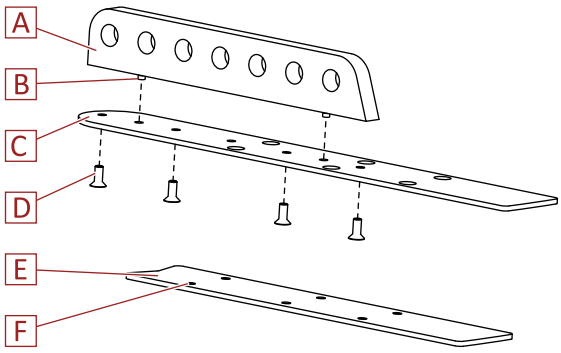

 © KLING & FREITAG GMBH

7 Technical Specifications

7.1 Horizontal cluster flying set/cluster plate set (Point Source)

7.1.1 Overview

Load capacity	2 x SPECTRA 212i
Weight	Horizontal cluster flying set: 8.7 kg Cluster plate set: 5.4 kg
Colors	RAL 9005 (black), standard RAL 9010 (white), standard RAL spot color, on request

7.1.2 Dimensions

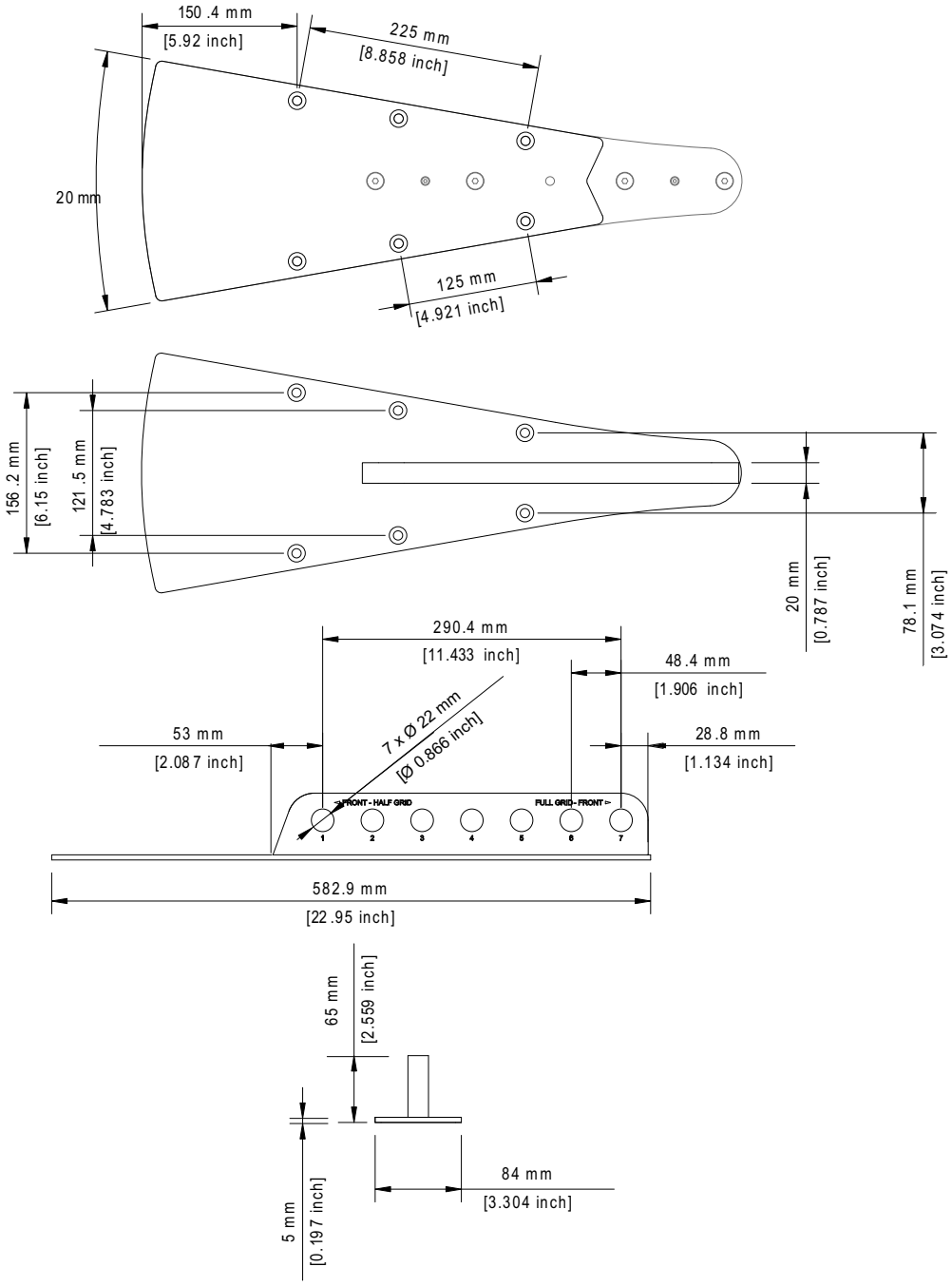

7.2 Connector Set/Connector Flying Set (Line Source)

7.2.1 Overview

Load capacity	2 x SPECTRA 212i
Weight	Connector set: 2,8 kg Connector flying set: 6.1 kg
Colors	RAL 9005 (black), standard RAL 9010 (white), standard RAL spot color, on request

7.2.2 Dimensions

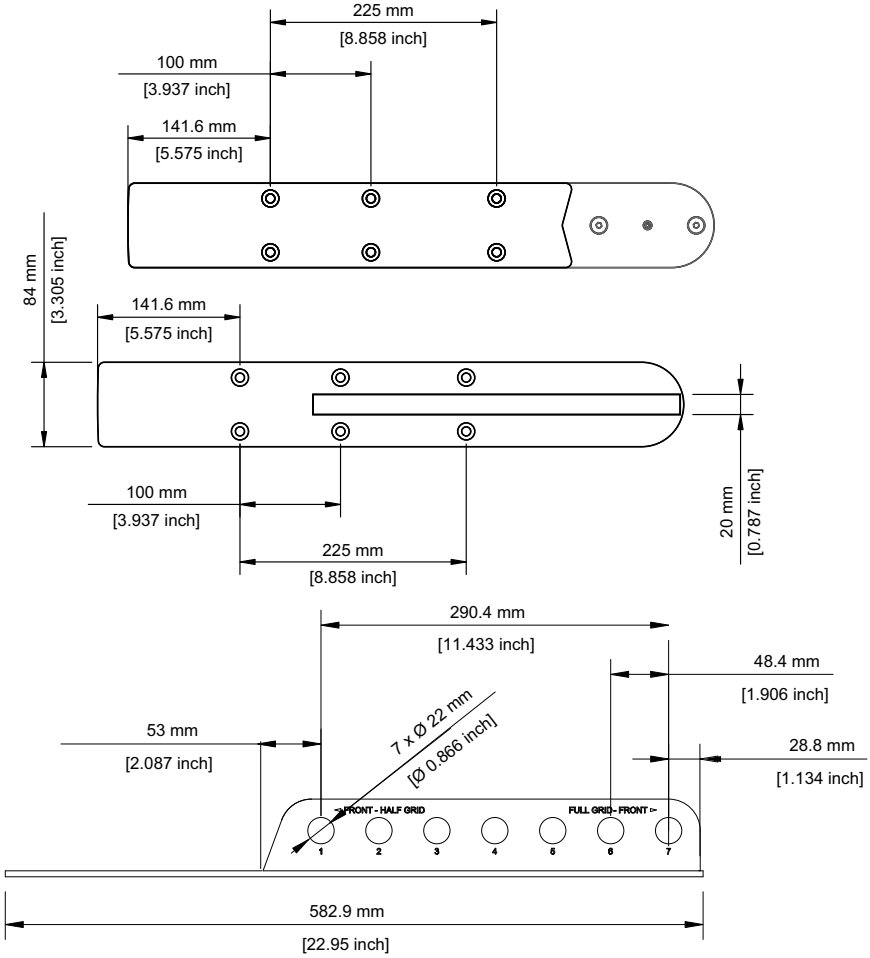

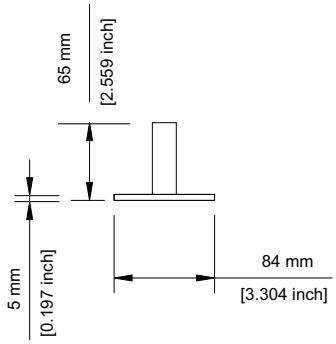

8 Safety Instructions

WARNING

Safety Instructions for Suspending the Speakers

Suspended loads pose a safety risk.

- Have all installation works including suspension as well as wall or ceiling mount performed by qualified event technicians or appropriately trained persons.
- Only qualified technicians are permitted to perform the installation steps. Be sure to use personal protective equipment at all times.
- Be sure to have all works carried out by untrained hands checked and approved by a qualified expert.
- The technicians installing the speaker on site are responsible for and guarantee safe setup and use.
- Installing and dismounting the speaker system requires at least two persons and a suitable lift for carrying and handling.
- Before installing, check the stability, strength, and materials of walls, ceilings, and boarding. For example, always use appropriate wall anchors for panels and check for sufficient strength.
- Note that the suspension points on the hall ceiling (i.e. shackles, attachment points, or chain hoists) must comply with the DGUV regulations 17 (BGV C1) or similar locally applicable accident-control standards. The maximum load must have been certified by an authorized expert.
- Be sure to tighten all bolts and screws to the specified torque.
- Unless otherwise stated, use only KLING & FREITAG original parts for mounting the speakers. Never use other parts (in particular, parts not made by KLING & FREITAG).
- Make sure all fittings used are suitable for the task at hand and meet all relevant safety requirements.
- Ensure that all connections are secured against coming loose and that only authorized, statically tested and correctly sized supports, mounting equipment, wire ropes and chains are used.
- Be sure to always visually inspect all safety-related speaker and accessory components before use. If there are signs of wear, cracks, or deformation, etc., replace the affected parts immediately. Visual inspection also includes checking all screwed connections of supporting components.
- The information described here does not relieve the user of the duty to follow the given safety requirements and legal regulations.

WARNING

Risks imposed by falling or overturning parts

- Be sure to install, suspend, fasten, and use Kling & Freitag speaker accessories only using the designated fixtures as specified in this document.
- Be sure to use only the screws supplied with the speaker for mounting accessories. The screws are specifically designed for accessory mounting. Be sure to use self-locking screws no more than five times. Using them more often may result in screws loosening in operation. If in doubt, use new screws. Never use other types of screws.
- During installation, be sure to cordon off the installation site to prevent any risks caused by falling parts.
- Always make sure that the speakers are sufficiently secured, so they cannot fall over even when external forces affect the speakers. Before installation, carefully check whether there are any external factors that may cause the stack to fall over. These include, for example, moving in operation caused by vibrations, the ground slope or bearing capacity, winds, and impacts of persons or vehicles. Qualified and appropriately trained installation personnel are in charge of evaluating the scenario and performing all required steps (including statics analysis). Proof of stability must be obtained if and as necessary.
- Installed systems must not fall over even if they are inclined by 15° in any direction. If this requirement is not fulfilled, be sure to take appropriate steps. E.g. lashing the speakers onto a suitable base or fastening them using straps. Never allow intended speaker tilting. The corresponding feature is simply used to account for unevenness during stability evaluation.
- Where the stability of installed systems cannot be proven without additional safety measures, those systems must be effectively secured against moving, sliding, and tipping to achieve compliance. For example, secure the system against tipping using water tanks or floor bolts. Other possible measures include lashing the speakers onto a suitable base or fastening them using straps.
- With applications where winds may occur, for example, outdoor events, tradeshows, etc., be sure to perform extra stability checks.
- Be sure to only use original parts supplied. Never use other parts (in particular, parts not made by KLING & FREITAG).
- Make sure all fittings used are suitable for the task at hand and meet all relevant safety requirements.
- Ensure that all connections are secured against coming loose and that only authorized, statically tested and correctly sized supports, mounting equipment, wire ropes and chains are used.
- Be sure to always visually inspect all safety-related speaker and accessory components before use. If there are signs of wear, cracks, or deformation, etc., replace the affected parts immediately. Visual inspection also includes checking all screwed connections of supporting components.
- The information described here does not relieve the user of the duty to follow the given safety requirements and legal regulations.

 © KLING & FREITAG GMBH

9 Mounting for Standing Operation

Required mounting accessories	Required Tools
• 1 x cluster plates stack (2 items included with the K&F SPECTRA 212i cluster plate set) or • 1 x connectors (2 items included with the K&F SPECTRA 212i connector set)	hexagon socket wrench IS6

WARNING

Danger! Speakers may tip and/or fall.

Note that the speakers can move as a result of vibrations. To prevent them from falling from their mounted position, they must be secured properly.

TIP

Handle with care to prevent damage to the speaker caused by the ground surface.

9.1 Cluster Plate Set

To build a cluster in point-source mode

1. Position the speakers in their place of use.
2. Remove the M8 screws shown in the adjacent figure.

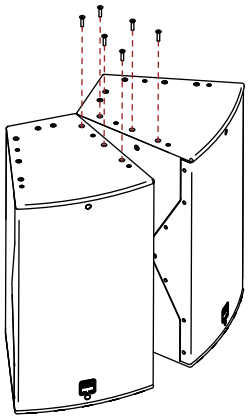

3. Interconnect the speakers using the cluster plate and the previously removed screws.
4. Hand-tighten the screws.
5. Secure the system so it won't start moving from its current position or fall over.
6. You may use the second cluster plate from the set for building a second cluster.

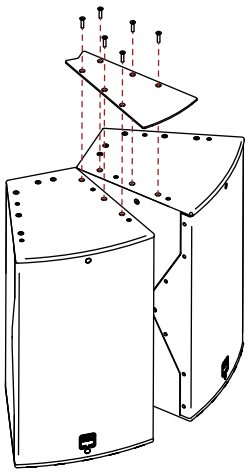

9.2 Connector Set

To build an array in line-source mode

1. Position the speakers in their place of use.
2. Remove the M8 screws shown in the adjacent figure.

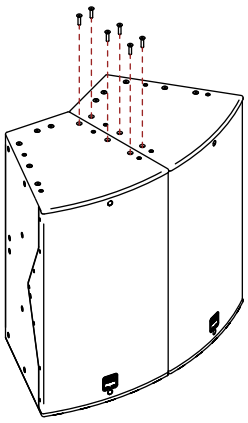

3. Connect the speakers using the connector and the previously removed screws.
4. Hand-tighten the screws.
5. Secure the system so it won't start moving from its current position or fall over.
6. You may use the second connector from the set for building a second array.

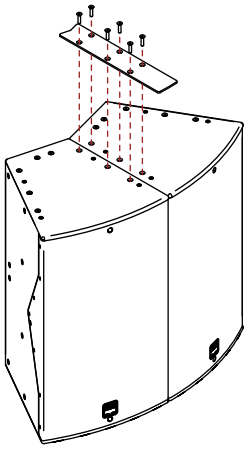

 © KLING & FREITAG GMBH

10 Mounting for Vertical Suspended Operation

For vertical suspended operation of two adjacent speakers, you need either a

K&F SPECTRA 212i horizontal cluster flying set (point source applications)

or a

K&F SPECTRA 212i connector flying set (line source applications)

For vertical suspended operation (horizontal cluster flying set/connector flying set), you first need to mount the flybar to the correct appropriate plate/connector.

To adjust the tilt angle of the speaker, select the hole matching the desired angle when suspending. To achieve a finer resolution, you can mount the bar in half-grid or full-grid mode. This is set by mounting the bar either in forward or in backward orientation.

10.1 Determining the Flybar Down-Tilt and Orientation

Refer to the tables below for information on the correct flybar orientation and the hole to be used for the desired down-tilt:

10.1.1 Horizontal Cluster Flying Set (Point Source)

Cluster with two speakers, vertically suspended with flybar.

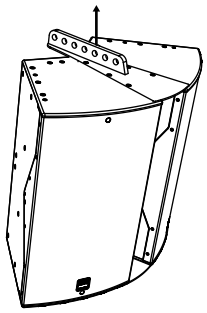

Flybar hole	Flybar grid mode	Speaker down-tilt	Main directivity in point source mode WHITE MARK (–10°)	Main directivity in point source mode RED MARK (+10°)
7	Half grid	-33.5	-40.0	-20.0
7	Full Grid	-31.1	-37.7	-17.7
6	Half grid	-28.7	-35.3	-15.3
6	Full Grid	-26.1	-32.8	-12.8
5	Half grid	-23.3	-30.2	-10.2
5	Full Grid	-20.5	-27.5	-7.5
4	Half grid	-17.5	-24.8	-4.8
4	Full Grid	-14.5	-21.9	-1.9
3	Half grid	-11.4	-19.0	1.0
3	Full Grid	-8.2	-16.1	3.9
2	Half grid	-4.9	-13.1	6.9
2	Full Grid	-1.6	-10.1	9.9
1	Half grid	1.7	-7.1	12.9
1	Full Grid	5.0	-4.2	15.8

10.1.2 Connector Flying Set (Line Source)

Array of two speakers, vertically suspended with flybar.

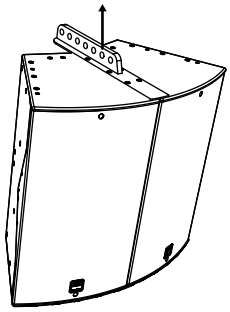

Flybar hole		Speaker down-tilt
7	Half grid	35.8
7	Full Grid	-33.6
6	Half grid	-31.2
6	Full Grid	-28.7
5	Half grid	-26.1
5	Full Grid	-23,4
4	Half grid	-20.6
4	Full Grid	-17.6
3	Half grid	-14.6
3	Full Grid	-11.5
2	Half grid	-8.3
2	Full Grid	-5.0
1	Half grid	-1.7
1	Full Grid	1.6

-

 © KLING & FREITAG GMBH

10.1.3 Flybar grid mode (full-grid or half-grid)

[A] Half-grid mode

When the slanted flybar end points towards the speaker fronts, the flybar is aligned in half-grid mode.

The marks printed onto the flybar indicate the correct alignment.

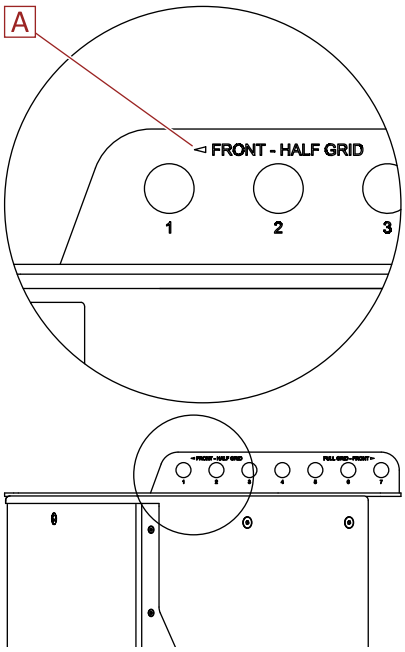

[B] Full-grid mode

When the straight flybar end points towards the speaker fronts, the flybar is aligned in full-grid mode.

The marks printed onto the flybar indicate the correct alignment.

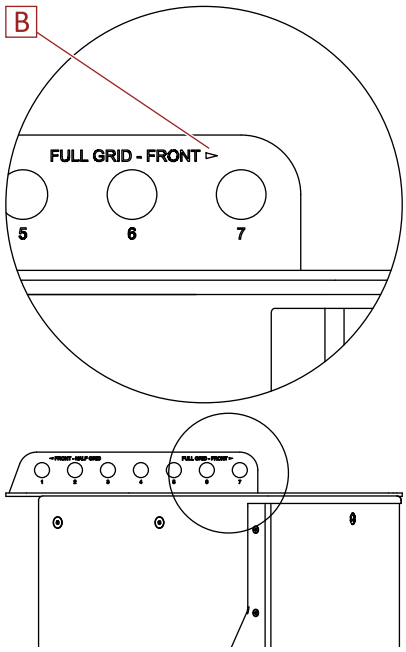

10.2 Mounting the Flybar

Required mounting accessories (included in the set)	**Required Tools**
• 1 x cluster plate fly **or** 1 x connector fly • Flybar • Mounting hardware • Loctite 2400	hexagon socket wrench IS5

1. Refer to the tables above for determining the required flybar alignment for the selected down-tilt.
2. Align the flybar **[A]** for half-grid or full-grid mode.
3. Place the flybar with the positioning aids (screw heads) **[B]** in the matching holes of the cluster plate fly or connector fly.
4. Apply Loctite 2400 (supplied) to the threads of the four M8 x 20 countersunk screws **[D]**.
5. Screw flybar **[A]** to the cluster plate fly or connector fly **[C]**.

- Hand-tighten the screws.

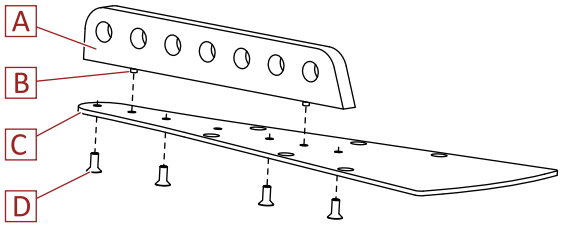

The figure shows the assembly using the cluster plate fly as an example.

The procedure is the same with the connector fly.

 © KLING & FREITAG GMBH

10.3 Mounting the Horizontal Cluster Flying Set to the Speaker

To build a vertical suspended cluster in point-source mode

Items required	Required Tools
• 1 x K&F SPECTRA 212i horizontal cluster plate flying set • 2 x K&F SPECTRA 212i	hexagon socket wrench IS6

WARNING

Risk of overloading

With suspended configurations, be sure to mount both plates. A single plate is not sufficient to carry the load. Unlike, when placing the speakers on a suitable surface, one plate is sufficient for interconnection.

Danger from loosening connections

Be sure to use self-locking screws no more than five times. Using them more often may result in screws loosening in operation. If in doubt, use new screws. Never use other types of screws.

TIP

Handle with care to prevent damage to the speaker caused by the ground surface.

1. Carefully place the speakers side by side on their front sides.
2. Remove the M8 screws shown in the adjacent figure.

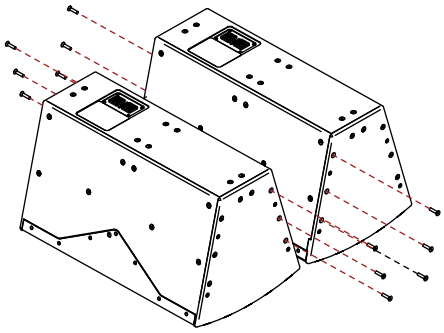

3. Attach the two bottommost screws of the cluster plate fly and the cluster plate to the speaker.

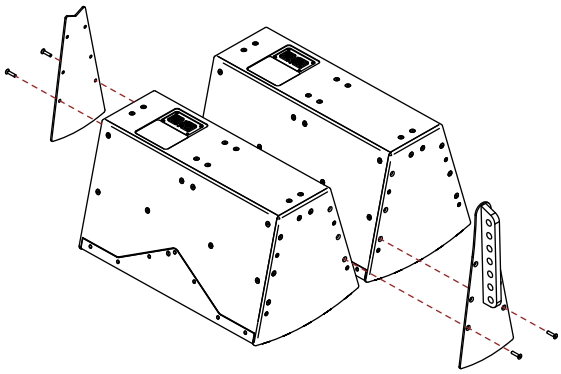

4. Move the speakers towards each other, so that the holes of the plates align with those in the speaker cabinet.
5. Attach the remaining screws.
6. Hand-tighten all screws.

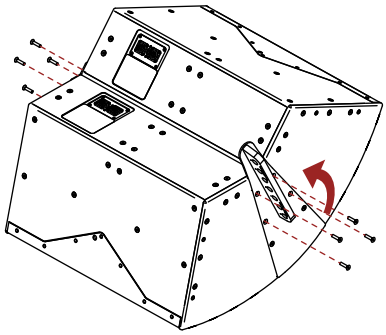

7. Place the cluster upright.
8. If necessary, mount a receptacle such as the K&F 450 rotation clamp to the flybar.
9. Suspend the cluster. For wall or ceiling installation, refer to the respective accessory manual.

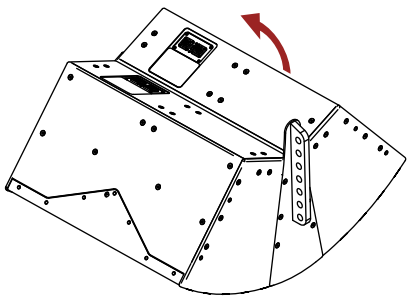

 © KLING & FREITAG GMBH

10.4 Mounting the Connector Flying Set to the Speaker

To build a vertical suspended cluster in line-source mode

Items required	Required Tools
• 1 x K&F SPECTRA 212i connector flying set • 2 x K&F SPECTRA 212i	hexagon socket wrench IS6

WARNING

Risk of overloading

With suspended configurations, be sure to mount both plates. A single plate is not sufficient to carry the load. Unlike, when placing the speakers on a suitable surface, one plate is sufficient for interconnection.

Danger from loosening connections

Be sure to use self-locking screws no more than five times. Using them more often may result in screws loosening in operation. If in doubt, use new screws. Never use other types of screws.

TIP

Handle with care to prevent damage to the speaker caused by the ground surface.

1. Carefully place the speakers side by side on their front sides.
2. Remove the M8 screws shown in the adjacent figure.

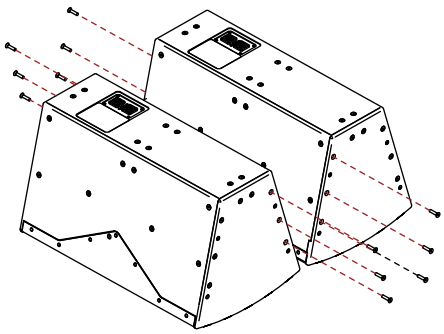

3. First, loosely attach both the connector and the connector fly to one speaker using three screws each.

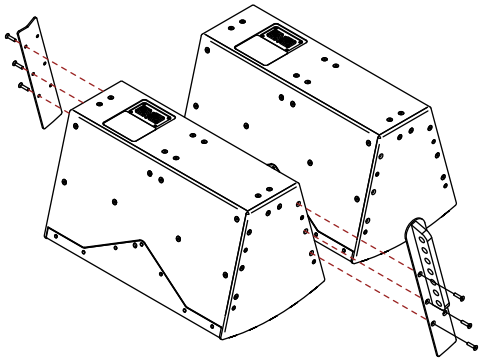

4. Place the speakers side by side, so that the accessory holes are aligned with those in the side panels.
5. Attach the remaining screws.
6. Hand-tighten all screws.

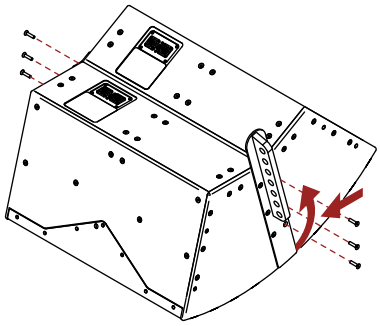

7. Put up the array.
8. If necessary, mount a receptacle such as the K&F 450 rotation clamp to the flybar.
9. Suspend the array. For wall or ceiling installation, refer to the respective accessory manual.

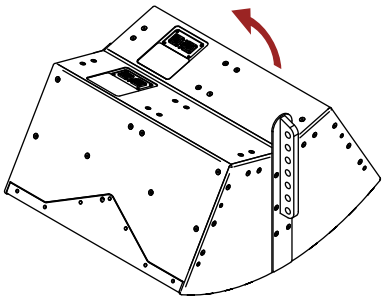

 © KLING & FREITAG GMBH

11 Mounting for Horizontal Suspended Operation

11.1 Mounting the Cluster Plate Set and the Flying Frame to the Speaker

To build a horizontal suspended cluster in point-source mode

Items required	Required Tools
• 1 x K&F SPECTRA 212i horizontal cluster flying set • 1 x K&F SPECTRA 212i flying frame • 2 x K&F SPECTRA 212i	hexagon socket wrench IS6

WARNING

Risk of overloading

Never suspend more than two speakers on top of each other!

Danger from loosening connections

Be sure to use self-locking screws no more than five times. Using them more often may result in screws loosening in operation. If in doubt, use new screws. Never use other types of screws.

TIP

Handle with care to prevent damage to the speaker caused by the ground surface.

1. To mount the flying frame, remove the M8 mounting screws from one side of the speaker.

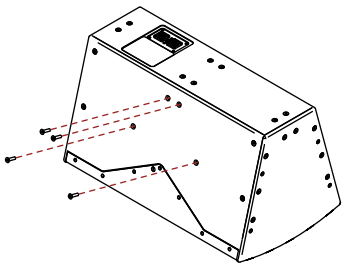

2. Mount the flying frame to the speaker by attaching the removed screws to the mounting holes of the speaker.

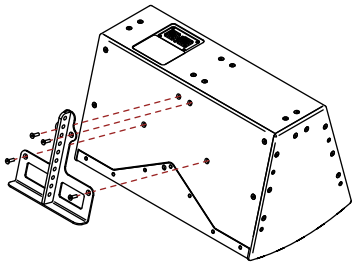

3. Carefully place the speakers side by side on their front sides.
4. Remove the M8 screws shown in the adjacent figure.

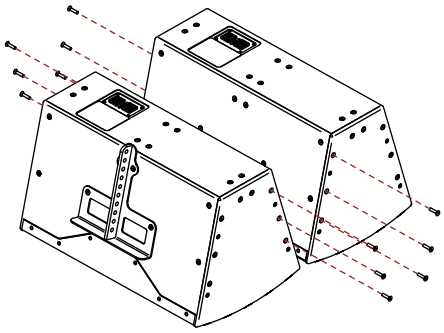

5. Attach the two bottommost screws of the cluster plates to the speaker.

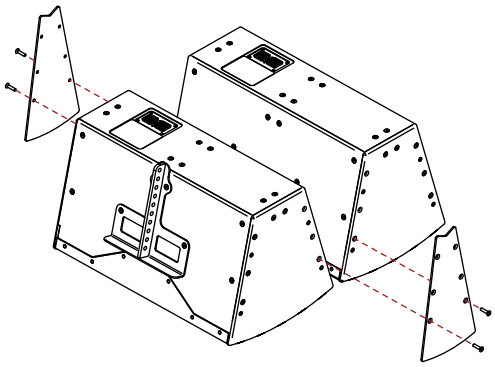

6. Move the speakers towards each other, so that the holes of the plates align with those in the speaker cabinet.
7. Attach the remaining screws.
8. Hand-tighten all screws.
9. **Refer to the instructions in the K&F SPECTRA 212i flying-frame manual for** suspending the cluster using the flying-frame holes provided for this purpose.
10. For wall or ceiling installation, refer to the respective accessory manual.

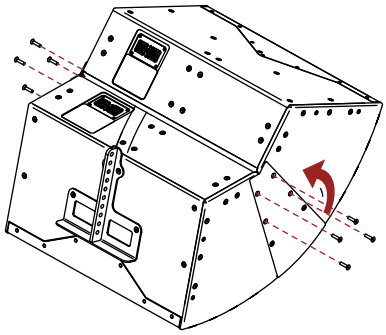

 © KLING & FREITAG GMBH

11.2 Mounting the Connector Set and the Flying Frame to the Speaker

To build a horizontal suspended array in line-source mode

Required mounting accessories	Required Tools
• 1 x K&F SPECTRA 212i connector set • 1 x K&F SPECTRA 212i flying frame • 2 x K&F SPECTRA 212i	hexagon socket wrench IS6

WARNING

Risk of overloading

Never suspend more than two speakers on top of each other!

Danger from loosening connections

Be sure to use self-locking screws no more than five times. Using them more often may result in screws loosening in operation. If in doubt, use new screws. Never use other types of screws.

TIP

Handle with care to prevent damage to the speaker caused by the ground surface.

1. To mount the flying frame, remove the M8 mounting screws from one side of the speaker.

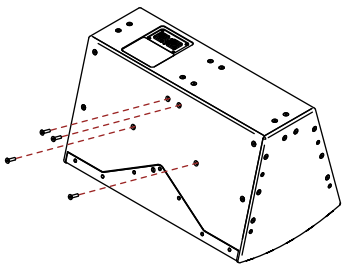

2. Mount the flying frame to the speaker by attaching the removed screws to the mounting holes of the speaker.

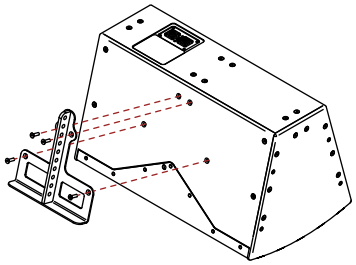

3. Carefully place the speakers side by side on their front sides.
4. Remove the M8 screws shown in the adjacent figure.

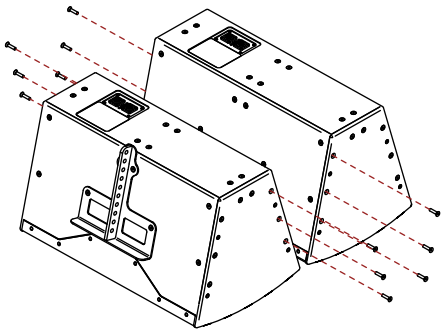

5. First, loosely attach both connectors to one speaker with three screws each.

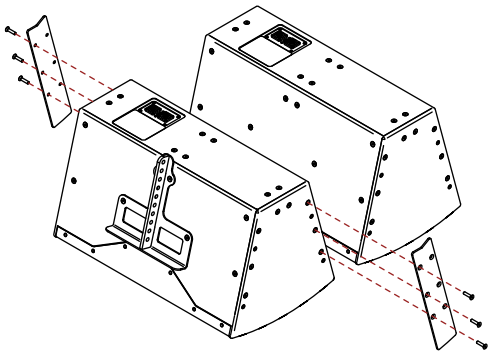

6. Place the speakers side by side, so that the accessory holes are aligned with those in the speaker's side panels.
7. Attach the remaining screws.
8. Hand-tighten all screws.
9. **Refer to the instructions in the K&F SPECTRA 212i flying-frame manual for how to** suspend the array using the flying-frame holes provided for this purpose.
10. For wall or ceiling installation, refer to the respective accessory manual.

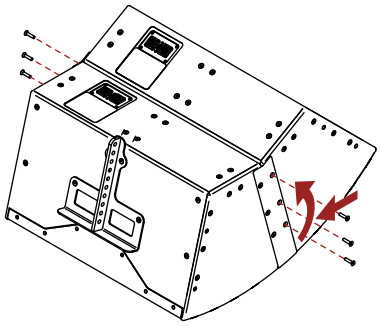

 © KLING & FREITAG GMBH

12 Maintenance

- Perform a visual inspection before each installation.
- Visually inspect the entire setup every six months.
- When performing those checks, particularly look for deformations, cracks, dents, damage to threads, and corrosion. Also check slings and lifts (e.g. shackles, chains, and steel ropes) carefully for wear and deformation.

WARNING

Risks imposed by undetected damages

- The inspection must be carried out by a qualified expert.
- If as a result of these checks any uncertainty should arise with regard to safety or defects are found, don't use the speaker any longer. Contact your retailer.
- Be sure to use self-locking screws no more than five times. Using them more often may result in screws loosening in operation. If in doubt, use new screws. Never use other types of screws.
- All repair work must be performed by Kling & Freitag after evaluation carried out by engineering.

- Many countries require regular inspection of mounting components and accessories. An additional annual inspection is typically required to be performed by a technical expert. Moreover, a legally certified or official authority must perform a detailed inspection every four years.
- Therefore, be sure to maintain an inspection log. Enter the values determined for each speaker and accessory during the periodic checks into this log. This way, relevant data are always at hand in case of inspection. This inspection log book shall be updated with the inspection steps, test intervals and parts lists.
- If necessary, use multifunction oil for care.

12.1 Transportation and Storage

This product is protected against the effects of temporary humidity and moisture, etc. Nevertheless, be sure to store, transport, and use it in dry

Make sure that the system is adequately ventilated during longer storage periods so any residual moisture can escape from the equipment.

In addition, make sure that the prpduct is protected from mechanical strains in order to prevent damage.

To protect the speaker from the above impacts, we recommend using suitable transport and storage equipment.

12.2 Disposal

Dispose of this product according to local ordinance regulations.

13 Declaration of Conformity

EG-Konformitätserklärung

(Declaration of EG-Conformity)

Hersteller: *(Manufacturer)*	Kling & Freitag GmbH Junkersstraße 14 30179 Hannover Deutschland
Bevollmächtigter für die Zusammenstellung der technischen Unterlagen: *(Authorized representative for the compilation of technical documents)*	Kling & Freitag GmbH Abt. Entwicklung Dipl. Ing. Arne Muscheites +49 (0)511 / 96997-50 Deutschland
Produkt: *(Product)*	**Lautsprecherzubehör** (Loudspeaker Accessories) **K&F SPECTRA 212i Verbinder Flug Set** (K&F Connector Flying Set) **K&F SPECTRA 212i Horizontal Cluster Flug Set** (K&F Horizontal Cluster Flying Set)

Hiermit erklären wir, dass das genannte Produkt den Schutzanforderungen der folgenden EG-Richtlinien entspricht, einschließlich deren zum Zeitpunkt dieser Erklärung gültigen Änderungen:

(We hereby declare that the designated product is compliant with the safety requirements of the following EU directives - including the changes which applied at the time of the declaration:)

- 2006/42/EG, Maschinenrichtlinie (Machinery Directive)

Folgende internationale und nationale Normen und Vorschriften wurden angewandt:

(The following national and international standards and specifications were applied:)

- Eurocode 1/DIN EN 1991-1-1 : 12/2010
- Eurocode 3/DIN EN 1993-1-1 : 12/2010
- DIN EN ISO 12100 : 2011-03
- DIN ISO/TR 14121-2 : 2013-02
- DGUV Vorschrift 17 (BGV C1)

Hannover, 09.07.2019

Jürgen Freitag, Geschäftsführung (CEO)

 © KLING & FREITAG GMBH

THANK YOU FOR CHOOSING K&F.

KLING & FREITAG GmbH

Wohlenbergstrasse 5 · D-30179 Hannover
Phone +49 (0)511 969970
www.kling-freitag.de · info@kling-freitag.de