1. Introduction

Thank you for purchasing a KLING & FREITAG product. To guarantee a trouble-free operating of the equipment and to allow your KLING & FREITAG NOMOS LS system to achieve its full potential read the operating instructions carefully before use. This item is a quality accessory for the NOMOS LS speaker system. As the owner of a NOMOS LS loudspeaker, you now have a versatile and highly professional tool which, when operated properly, is a true pleasure to use.

1.1 Icons Used

Warning

This icon indicates a risk of injury or death. Not following these instructions may result in serious health problems including potentially fatal injuries.

Caution

This icon indicates a possibly dangerous situation. Not following these instructions may cause minor injuries or damage.

This icon marks instructions for proper use of the described products. Not following these instructions may cause malfunctions or damage.

Tip

This icon marks information provided for simplified use of the described products.

1.2 About these operating instructions

All specifications regarding the features of the described products and applicable safety guidelines provided in these operating instructions are based on information available at the time of publishing.

We assume no responsibility for technical specifications, dimensions, weights, and properties.

All information in these operating instructions is subject to change without notice.

All persons who use the speaker system must have this guide and all further information for safe operations available to them during assembly, disassembly, and use. The speaker system may neither be set up nor used until these operating instructions has been read, understood and kept readily available in site.

The original language of all KLING & FREITAG operating instructions is German.

If you need operating instructions from KLING & FREITAG, you can order a replacement or download it from our www.kling-freitag.de.

Contact: info@kling-freitag.de
KLING & FREITAG GMBH, Junkersstr. 14, D-30179 Hannover
Telefon +49 (0) 511 96 99 70, Telefax +49 (0) 511 67 37 94

2. Product Description

2.1 Items Included

- Subwoofer NOMOS LS
- (1x) Operating Instructions

2.2 System Requirements

K&F TOPAS-system amp

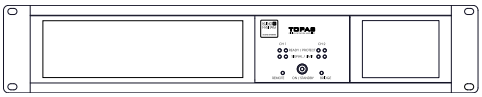

or

Lab.gruppen IPD 2400

or

K&F PLM+ 12k44 (SystemAmp, ProRental)

or

K&F SystemRack:

LAB.GRUPPEN FP 10000Q:

These components are referred to as 'K&F SystemRack'.

Optional:

Connector Panel CP 4:

2.3 Components

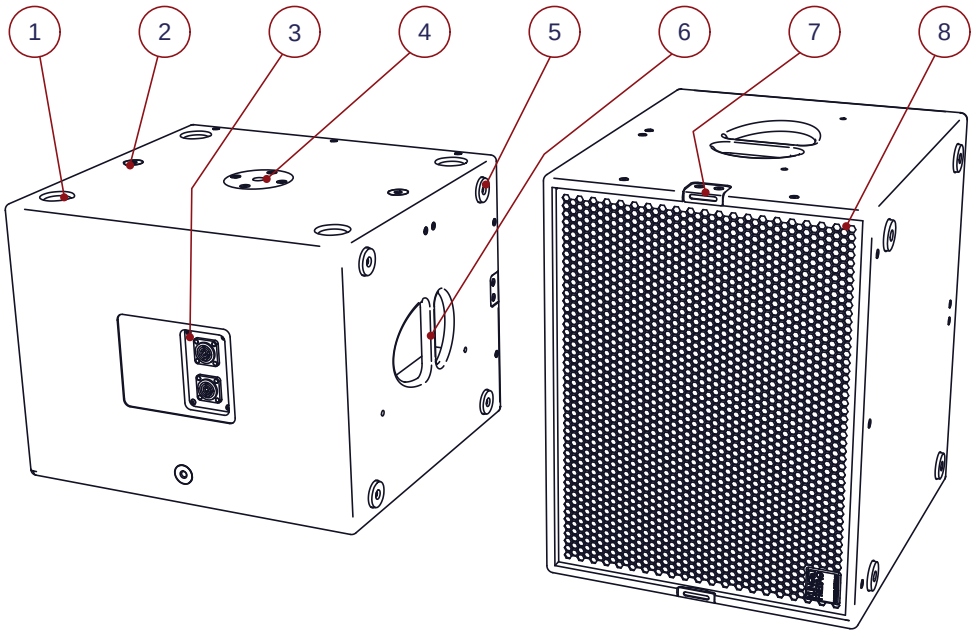

1. **4 x Stacking grooves** on top of the enclosure, for stackings of identical enclosures
2. **(3x) flying and securing point K&F 'VariPoint'** Enables flying by using either the 'K&F Lifting Pin' or standard M10 threads.
3. **(2x) SpeakOn connector** 4-pin NLT4MP (parallel)
4. **Threaded stand flange** with M20 threads for use with distance rod.
5. **(8x) rubber foot** 4 x on the side, 4 x on the bottom.
6. **(2x) handle**
7. **locking profiles for optional transport cover**
8. **Front grille**

2.4 Accessories

Lifting Pin	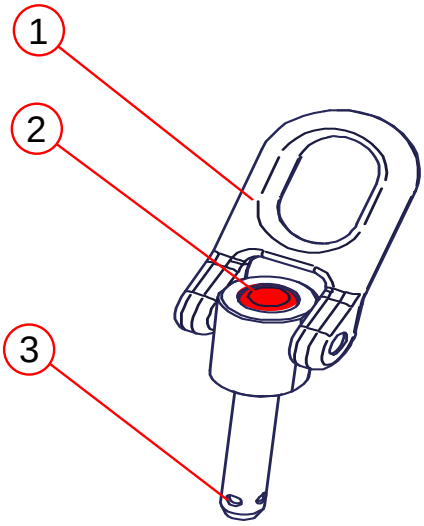
M10 x 17 Eyebolt	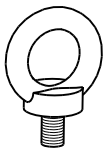
Protective Cover NOMOS LS	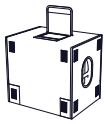
Distance rod 337	
Transport Cover NOMOS LS	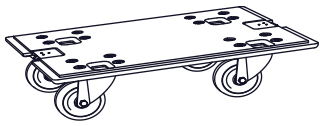

3. Safety Instructions

3.1 Mounting the Speakers / Wall and Ceiling Installation

Warning

Suspended loads pose a safety risk.

Only qualified technicians are permitted to perform the installation steps. Be sure to use personal protective equipment at all times.

The technicians installing the speaker on site are responsible for and guarantee safe setup and use.

Never use signal cables or power cords for suspending, aligning, or securing the systems.

Before installing, check the stability, strength, and materials of walls, ceilings, and boarding. For example, use suitable rawlplugs for wall panels and make sure the strength is sufficient.

Note that the suspension points on the hall ceiling (i.e. shackles, attachment points, or chain hoists) must comply with the DGUV regulations 17 or similar locally applicable accident-control standards. The maximum load must have been certified by an authorized expert.

Be sure to tighten all bolts and screws to the specified torque.

Unless otherwise stated, use only KLING & FREITAG original parts for mounting the speakers. Never use other parts (in particular, parts not made by KLING & FREITAG).

Make sure all fittings used are suitable for the task at hand and meet all relevant safety requirements.

Ensure that all connections are secured against coming loose and that only authorized, statically tested and correctly sized supports, mounting equipment, wire ropes and chains are used.

Be sure to always visually inspect all safety-related speaker and accessory components before use. If there are signs of wear, cracks, or deformation, etc., replace the affected parts immediately. Visual inspection also includes checking all screwed connections of supporting components.

The information described here does not relieve the user of the duty to follow the given safety requirements and legal regulations.

3.2 Notes for Mounting the Speakers

Warning

Mount the speakers securely. To avoid injury or damage, always be sure to mount the speakers securely so that they do not fall.

Please note that speakers can move as a result of vibrations. To prevent them from falling from their mounted position, they must be secured properly.

Run the cables in a way that nobody can trip over them.

3.3 Instructions for Speaker Stacking

Warning

Falling speakers pose the threat of fatal injuries to people near them!

Be sure to follow the relevant national specifications, norms, and safety regulations.

Always make sure that a sufficient safety level is still given, even when outside forces have an additional impact on the stacked speakers. Before setup, carefully ascertain if there are any possible outside forces that could result in the array falling over. (Slant of the ground / the bearing capacity of the ground / wind / person or vehicle impact, etc.). A technical expert who is responsible for the setup must evaluate and determine necessary measures (including calculating the statics). If necessary, obtain expert proof of stability.

Stacked systems may not fall over even if they are inclined by 15° in each direction. If this requirement is not fulfilled, then it is necessary to take steps to achieve compliance. Possible measures include strapping it to an appropriate base structure or fastening it using safety straps. A planned tilt of the loudspeakers ist not permissible. In calculations, the tilted setup serves the purpose of levelling out unevenness.

With the set-up systems for which you cannot verify the structural safety without safeguards, you must secure them to prevent sliding or tipping in order to provide proof of this safety. To secure the system from tipping over, use water tanks or floor bolts. Other possible measures include strapping it to a suitable substructure or tying it using safety straps.

For outdoor and trade fair venues in which wind loads must be considered, additional proof of stability is necessary.

Make sure that the stacking feet of subwoofers stacked on top of one another are securely positioned in the grooves of the lower speaker.

If you place a top speaker on a NOMOS LS you must always strap the speakers to one another and secure them from falling over.

3.4 Preventing Hearing Damage

Caution

Keep your distance from operating speakers. This equipment is capable of delivering sound pressure levels in excess of 90 dB SPL, which may cause permanent hearing damage.

3.5 Protecting the Speakers / Operating Safety

Notice

NOMOS LS speakers may only be used in combination with a K&F SystemAmp/SystemRack.

In general, audio signals must not be overdriven. This may be caused by mixing consoles, equalizers, effect equipment, etc. and should be indicated on this equipment. When a power amplifier is overloaded at the output (clipping), then the amplifier activates a clipping warning signal. In any case, the signal must be reduced as soon as it sounds unnaturally distorted.

For damage caused by

- overloading the speakers or
- using the speakers without K&F SystemAmp/SystemRack

we do not assume warranty and excludes liability for possible consequential damage.

The following signals may damage the speakers:

- permanent high-level signals with high frequency and continuous noise from feedback,
- permanently distorted high-level signals,
- noises, which occur when the amplifier is on while equipment is being connected, disconnected or switched on.

Do not install devices in any of the following places:

- where the devices are permanently exposed to direct sunlight.
- where the devices are exposed to high moisture or rain.
- where the devices are exposed to strong vibrations and dust.

Damage caused by the speakers' magnetic fields

Speakers are permanently surrounded by a magnetic field, even when they are not connected. Therefore, during transport and placement of the speakers, it is important to ensure that there is always approx. 1 m between the speakers and magnetic data media and computer/video monitors.

4. Suspending the Speakers

By using the K&F 'Lifting Pin' or the M10 x 17 eyebolts available as optional accessories from Kling &Freitag, you can fly the speaker.

Warning

1

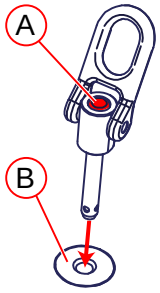

Push the release button A and completely insert the lifting pin into the flying point B.

2.

Let go of the release button when you have completely inserted the bolt so that the release button pops back up. Ensure that you cannot pull out the lifting pin any more.

4.1 Securing the Speakers (Secondary Safety Device)

The flying and securing point K&F 'VariPoint' and the K&F Lifting Pin are suitable for securing a secondary safety device according to the German safety regulations BGV C1.

Safety rope with rope damper by the brand 'Major Saveking®'

wire length	wire diameter	max. falling height
0.6 m or 1 m	4mm	0.2m

5. Fuse in the NOMOS LS

To increase the operating safety of the NOMOS LS, the subwoofer is equipped with fuses at the signal input mounted on the crossover. This fuse reduces the risk of consequential damage resulting from a short circuit (i.e. charred cables / connectors / fire damage).

5.1 Replacing the Fuses

Notice

When the fuse is burned out, then the chassis is most likely already ruined, as the fuse just prevents consequential damage resulting from a short circuit of the chassis. A replacement of the chassis is, therefore, unavoidable.

Required tools:

1. 3 mm Allen key for loosening the front grille
2. 3 mm Allen key for loosening the chassis

Instructions:

1. Remove the front grille.
2. Remove the speaker chassis.
3. Replace the fuse.

   The fuse holder is mounted on the internal crossover.

   Replace the fuse with the following original fuse only:
   Bussmann S 506-8A, T 250 V
4. Insert the (replacement) chassis.

   By tightening the screws diagonally in two steps, a deformation of the chassis and thus a possible deentring of the voice coil can be avoided.
5. Mount the front grille.

6. Configuration and Connecting Diagram

6.1 NOMOS LS combined with other K&F tops.

6.1.1 Combination with Top Speakers in 2-Channel Mode

The NOMOS LS can only be combined in 2 channel mode with all K&F top speakers when using a K&F systemamp or systemrack. Controller CD 44

To do so, select the desired LS blocks for the top speaker in the K&F systemamp or systemrack, and combine these with the LS block for the Controller CD 44 subwoofer. NOMOS LS

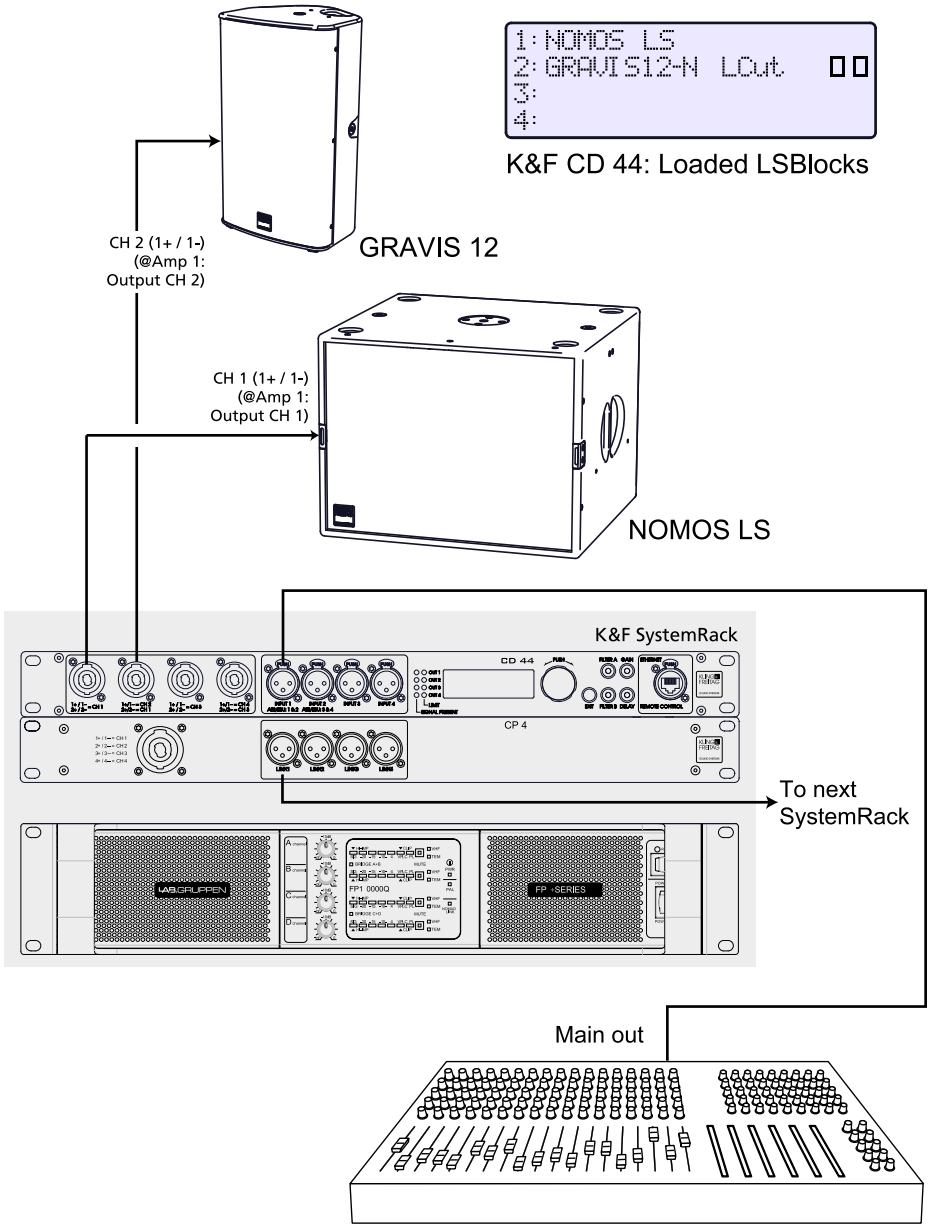


Tip

The 2-channel mode guarantees best sound quality and performance

6.1.2 Combination with Top Speakers in 1-Channel Mode

not_found NOMOS LSController CD 44

NOMOS LS combined with...	Selected LSBlock (Controller CD 44)
GRAVIS 12 N	Nom LS+Gra-12N
GRAVIS 12 W	Nom LS+Gra-12W
SCENA 15	NomLS+Scena 15
PASSIO	Nom LS+Passio

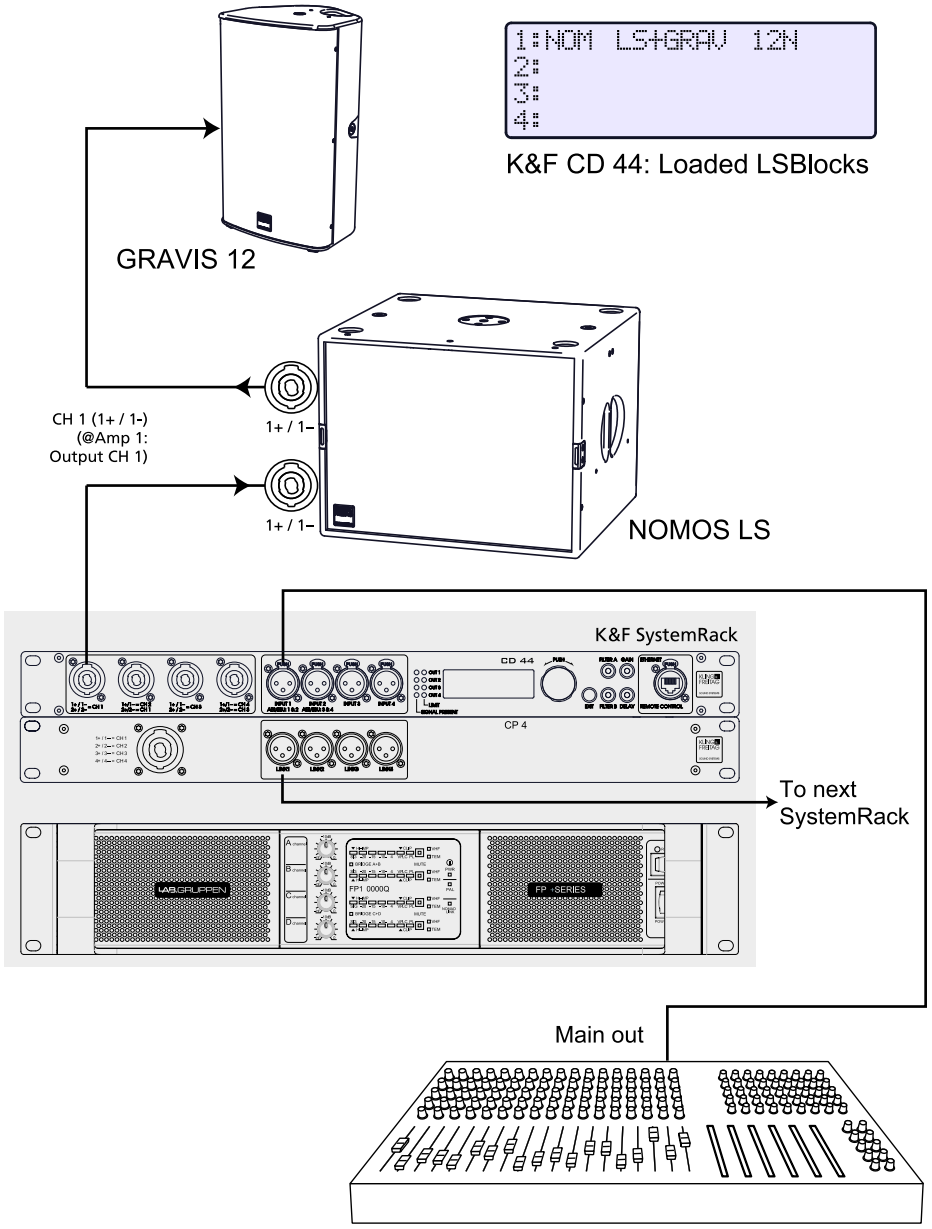

Depending on the top used, you must make allowances in 1-channel operations for more or less significant volume losses as compared to 2-channel operations.

Tip

6.2 Cardioid Arrays with NOMOS LS

The subwoofer NOMOS LS is designed so that it can be used as a cardioid system in an array of three subwoofers, or in multiples of three.

A cardioid array results in an increase of sound pressure towards the front because of the rear-facing subwoofer. In the rear area, on the other hand, the sound pressure is clearly reduced.

With this, you achieve

- less unwanted sound on the stage
- low feedback
- simplified miking
- improved room acoustics with fewer reflections from the rear and side walls, or – when flown – from the ceiling
- simplified adherence of sound emission limits and therefore less noise disturbance for nearby residential areas during open air events.

6.2.1 Setup instructions for a cardioid array

To achieve a cardioid pattern, you must always have an array with 3 subwoofers - or a multiple of 3 subwoofers - setup next to one another (3, 6, 9, etc.). In this set of three, the middle one must be rear-facing while both other subwoofers are front-facing.

You can choose from the following options for cardioid and hypercardioid setups:

3 x NOMOS LS horizontal

3 x NOMOS LS vertical

3 x NOMOS LS horizontal stacked

3 x NOMOS LS vertical stacked

When cardioid arrays are stacked on the floor, ensure that there is always a distance of at least 40 cm between each unit of 3.

6.2.2 LSBlocks for cardioid useController CD 44

The rear-facing subwoofer is controlled using the Controller CD 44 via LSBlock for cardioid arrays for rear-emitting subwoofers. The front-facing subwoofers are controlled via LSBlock for cardioid arrays for front-emitting subwoofers. The following cardioid LSBlocks are available in the Controller CD 44:

Operation Mode of the NOMOS LS	Selected LSBlock (Controller CD 44)
'Cardioid Front', front-facing	NOMOS LS C-F
'Cardioid Rear', rear-facing	NOMOS LS C-R

7. Transportation and Storage

The NOMOS LS is protected against short-term moisture. Store, transport, and use the accessories in dry environments only. The NOMOS LS System is not designed for long-term use in a corrosive environment.

Make sure that the system is adequately ventilated during longer storage periods so any residual moisture can escape from the equipment.

Furthermore, you should ensure that the NOMOS LS System is protected from mechanical strain to prevent possible damage.

We recommend using suitable transport and storage cases and the optional soft cover that protects from the above-mentioned influences.

8. Care and Maintenance

Warning

1. For the owner and user, it is mandatory to be aware of the safety relevance of speakers that can be flown.

   Note that the mains cables are delivered with varying connector options or with open wires (mains side), depending on the country or order number.

   The NOMOS LS system can exhibit signs of wear over the years, for example, from mechanical strain, transport damage, corrosion, or improper handling. Remember that flying speakers always impose a high safety risk.

   Generally, perform a visual inspection of your speaker every time you suspend it or take it down. In fixed installations, check the speaker for signs of wear at regular intervals.

   When performing those checks, particularly look for deformations, cracks, dents, damage to threads, and corrosion. Also check slings and lifts (e.g. shackles, chains, and steel ropes) carefully for wear and deformation.

   If as a result of these checks any uncertainty should arise with regard to safety or defects are found, don’t use the speaker any longer.

   Inspection regulations may vary depending on application and country of use. Observe all applicable regulations; when in doubt, contact the local authorities.

   Many countries require regular inspection of mounting components and accessories. An additional annual inspection is typically required to be performed by a technical expert. Moreover, a legally certified or official authority must perform a detailed inspection every four years.

   Therefore, be sure to maintain an inspection log. Enter the values determined for each speaker and accessory during the periodic checks into this log. This way, relevant data are always at hand in case of inspection. The log should also document maintenance measures and inspection intervals and contain parts lists.

2. The Polyurea synthetic coating used by KLING & FREITAG is impact proof and highly resistant. We recommend using protective coverings or transport cases to help avoid damaging the paint in case of continuous mobile use, etc.

3. To replace the filter foam, send the front grille incl. foam to KLING & FREITAG GMBH. Upon payment for expenses, the grille with the new covering will be returned.

9. Technical Specifications

Speaker	
Concept	Bass reflex system (via K&F SystemRack or K&F TOPAS)
Cut-off frequencies (2-channel mode)	100 Hz
Lower cut-off frequency (-3 dB/-10 dB)	40 Hz / 33 Hz
Coverage	Omnidirectional (cardioid configuration in clusters of 3 possible)
Power handling	400 watts nominial[1)]
	800 watts program[2)]
Max. SPL	128.5 dB (SPL peak/1 m/free field)
Components	15“ Langhubchassis, doppelt zentrierte 75 mm Schwingspule, innen und außen belüftet, geringste Verzerrungen durch Demodulationsring
Speakers / channel	2
Connection	(+1/-1) 2 x Speakon® 4-pol NLT4MP IN parallel with OUT
Enclosure Design	
	15 mm Multiplex enclosure with highly resistable Polyurea synthetic coating in black, 2 ergonomic handles on the sides, 8 anti-slip rubber feet, 4 stacking grooves for save stackings of identical enclusures, 3 K&F VariPoint® for quick an safe rigging with pin or eyebolt, 2 locking profiles for optional transport cover, ball proof steel grille with black exchangeable acoustic foam behind the grille.
Dimensions (W x H x D)	565 x 435 x 510 mm
Weight	25 kg
Accessories	see catalogue or visit www.kling-freitag.de

1) Pink noise 40 – 250 Hz, 2 h; 2) as 1) but with 50% duty cycle

10. Measuring Diagrams

Polar Patterns

Cardioid

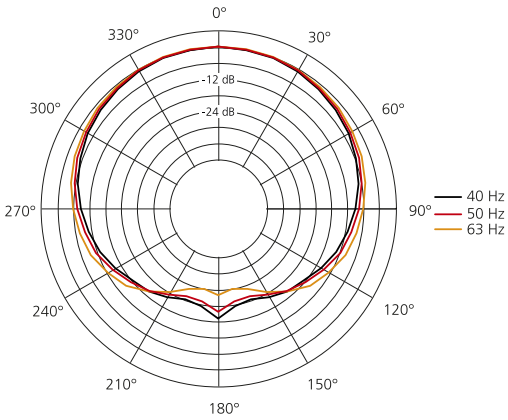

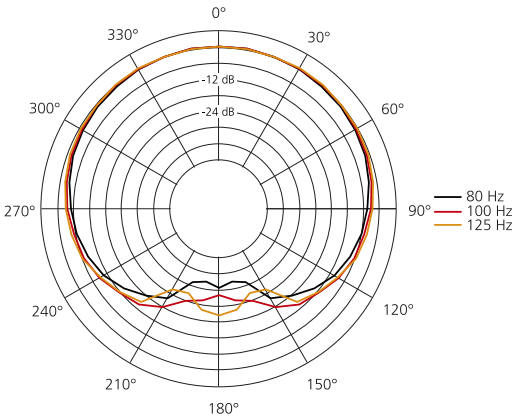

Frequency response

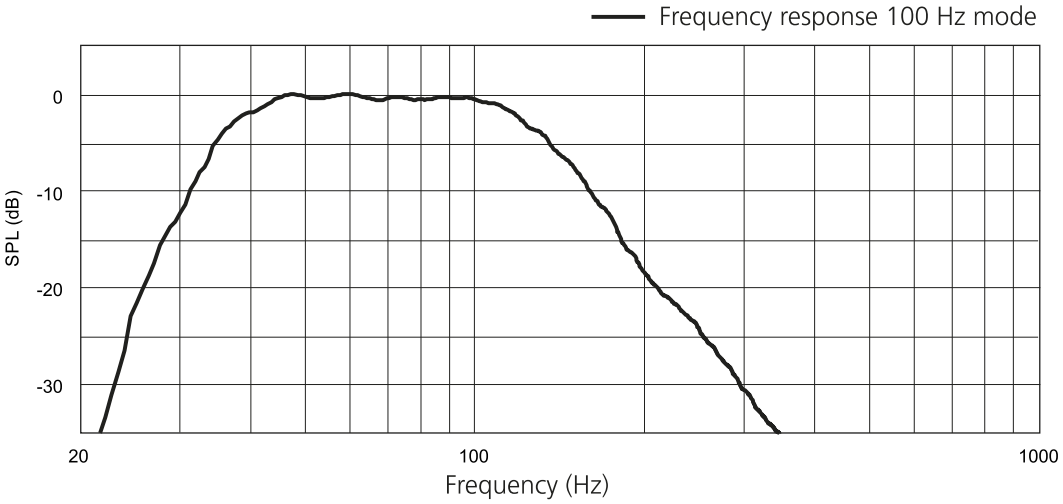

11. Dimensions NOMOS LS

12. Disposal

Please recycle the packaging material of the device.

12.1 Germany

Don’t dispose of waste electrical equipment through household waste.

Don’t deliver it to official recycling points either.

All KLING & FREITAG products are plain business-to-business (B2B) products. Therefore, KLING & FREITAG GmbH is exclusively responsible for disposing of all KLING & FREITAG waste equipment marked with a garbage-can icon. Please call the below phone number when you have a KLING & FREITAG product (marked with the garbage-can icon) for disposal. We will offer you a straightforward and professional disposal at no cost.

KLING & FREITAG equipment with no such icon was sold before 24 March 2006; in that case, the owner is legally responsible for disposal. We will, however, gladly assist you by naming appropriate ways of disposal.

For further disposal information of KLING & FREITAG waste products, call +49 (0)511-96 99 7-0

Background information: The Electrical and Electronic Equipment and Appliances Act (ElektroG) is the German implementation of the European (EU) Waste Electrical and Electronic Equipment Directive (WEEE, 2002/96/EC).

Therefore, starting on 24 March 2006, KLING & FREITAG GmbH has marked all products subject to the WEEE that are distributed in Germany with an icon showing a crossed-out garbage can with a white bar below it. The icon indicates that the equipment was distributed on or after 24 March 2006 and must not be disposed of through household waste.

KLING & FREITAG GmbH is legally registered as a manufacturer with the German waste-equipment registration authority (EAR). The WEEE registration number is: DE64110372.

We substantiated towards the EAR that our products are for B2B trade only.

12.2 EU, Norway, Iceland, and Liechtenstein

Don’t dispose of waste electrical equipment through household waste.

Starting on 13 August 2005, KLING & FREITAG GMBH has marked all products subject to the WEEE directive that are distributed in any member state of the European Union (except Germany), Norway, Iceland, or Liechtenstein with an icon showing a crossed-out garbage can with a white bar below it.

The icon indicates that the equipment was distributed on or after 13 August 2005 and must not be disposed of through household waste.

Unfortunately, the European WEEE directive was implemented in different national legislation in the EU member states, making it impossible to offer a consistent disposal solution throughout Europe.

The local distributor (sales partner) in the respective country is responsible for complying with the applicable legislation.

Contact your retailer or the local authorities for information on the regulations applicable in any EU member state (except Germany).

12.3 All Other Countries

Contact your retailer or the local authorities for information on the regulations applicable in any country not listed above.

13. EC Declaration of Conformity

applicable to all products designated hereafter and distributed by KLING & FREITAG GmbH including model variants unless these products have been altered afterwards.

Loudspeaker systems:

ACCESS B5	E 90 MK II	SEQUENZA 10 B
ACCESS B10	LINE 212 -6/-9	SEQUENZA 5 W
ACCESS T5/T9	NOMOS LS CIN	SEQUENZA 5 B
CA 106	NOMOS LS II	SONA 5 **)
CA 205 *) **)	NOMOS LT	SONA 6
CA 1001	NOMOS XLC	SONA 8
CA 1201 *)	NOMOS XLS	SONA SUB **)
CA 1215 -6/-9	NOMOS XLT	SONS SUB II
CA 1515 -6/-9	PASSIO **)	SW 112
GRAVIS 8 W	PASSIO SUB 12	SW 115D *)
GRAVIS 12 N/W*	PASSIO SUB 15	SW 115E
GRAVIS 12+ N/W/XW	SCENA 15	SW 118E
GRAVIS 15 N/W/XW	SEQUENZA 10 N/W	SW 212E

*) These products are discontinued.

**) These systems are not covered by the Low Voltage Directive because of the rated voltage used.

We declare that the designated product(s) are in conformity with the protection requirements imposed by the following EU directives:

Electromagnetic Compatibility (EMC) Directive	**(2004/108/EC)**
Low Voltage Directive	**(2006/95/EC)**
Technical documentation for the assessment of electrical and electronic products with respect to the restriction of hazardous substances	**(VDE 0042-12:2013-02)**

The operating conditions specified in these operating instructions must be met accordingly.

This declaration is issued under sole responsibility of the manufacturer:

KLING & FREITAG GmbH
Junkersstraße 14, D-30179 Hannover, Germany

Hannover, 30th March 2015

Jürgen Freitag
(Managing Director / CEO)