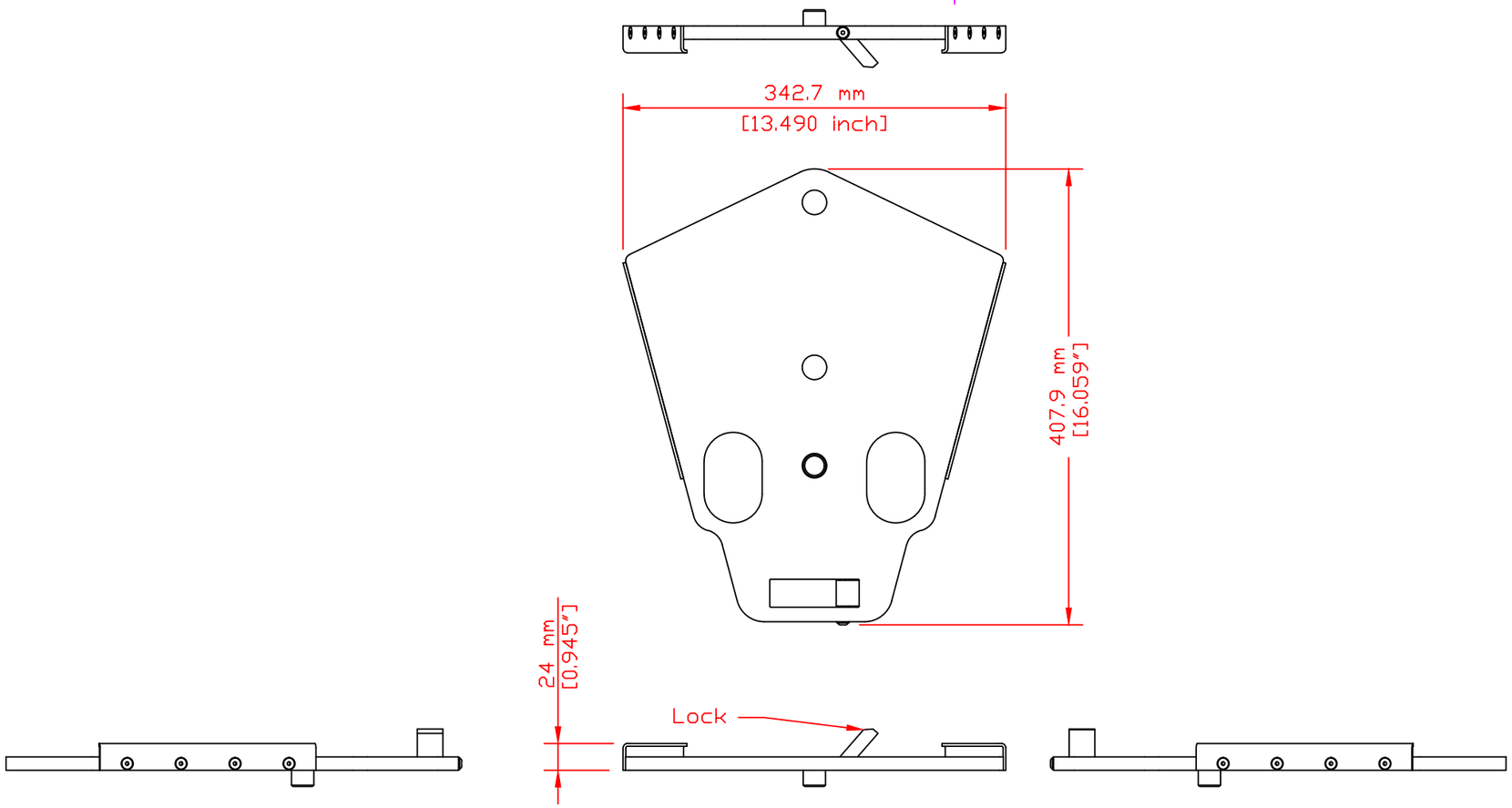

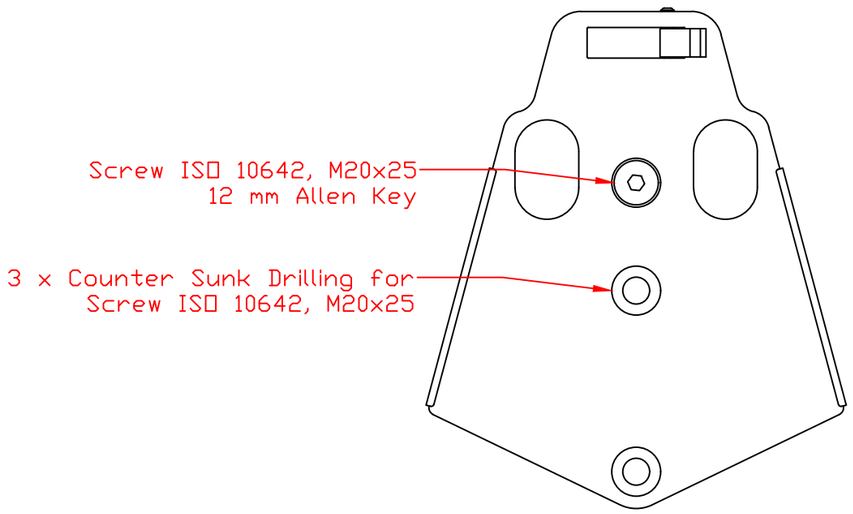

Weight	Catalog No.	Filename	Date	NOT TO SCALE
3.1 kg / 6.584 lbs		KF_SPECTRA_212_SUB_ADAPTER.dwg	06.06.2018	

Kling & Freitag GmbH
junkersstrasse 14
D-30179 Hannover
www.kling-freitag.de

K&F SPECTRA 212 Sub Adapter

Rev.	Sheet
1	1/1

INFORMATION IN THIS DOCUMENT IS THE SOLE PROPERTY OF KLING & FREITAG GmbH.
REPRODUCTION OF ALL OR ANY PART OF THIS DOCUMENT WITHOUT WRITTEN PERMISSION FROM
KLING & FREITAG GmbH IS PROHIBITED.